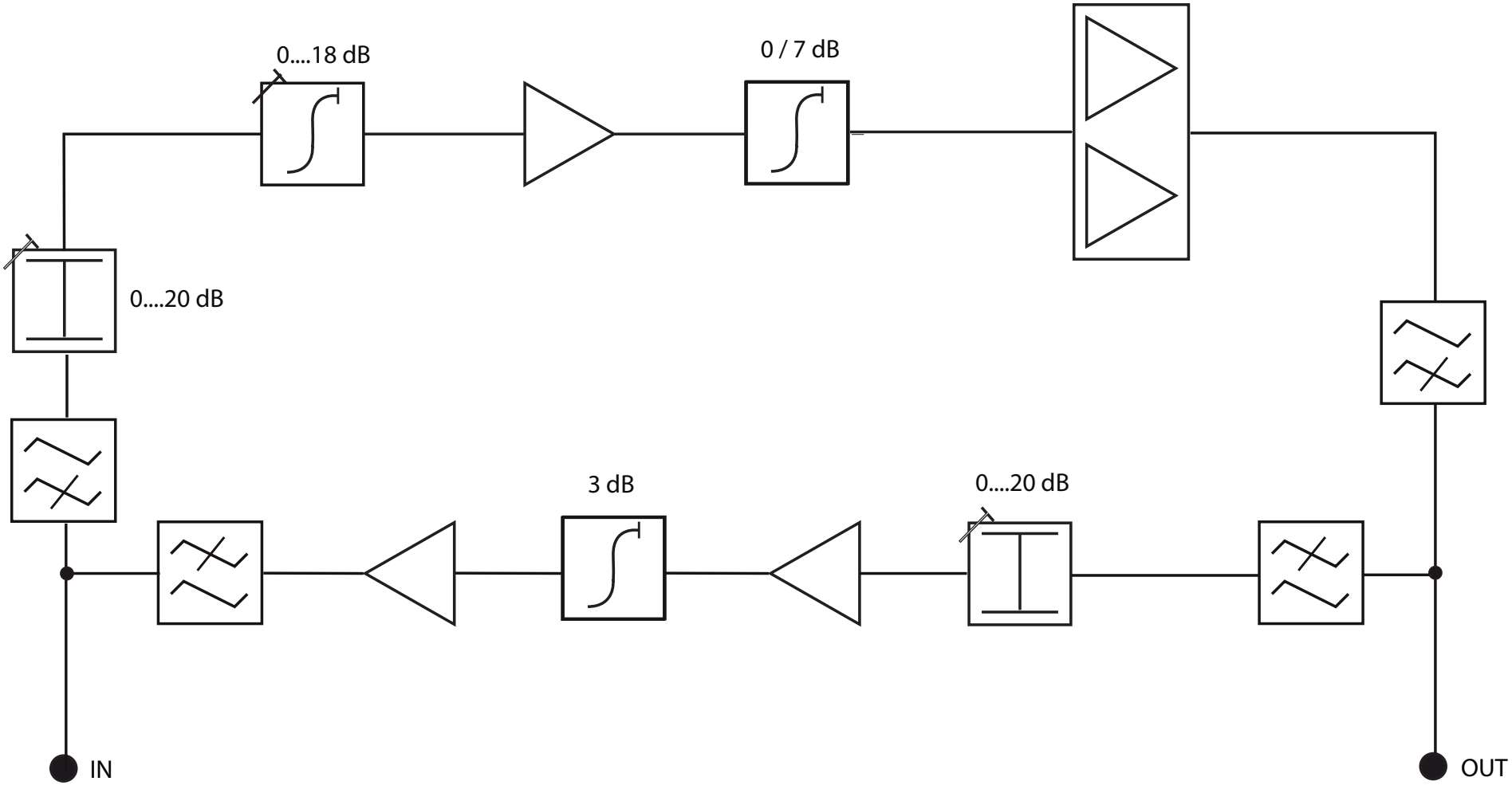
0....18 dB
0 / 7 dB
0....20 dB
3 dB
0....20 dB
IN
OUT